Model 50 Plug Type Duplex Basket Strainer

Sizes 5", 6", 8" • Iron, Bronze, Carbon Steel or Stainless Steel • Flanged

FEATURES

- Continuous flow, no shutdown for basket cleaning
- Rugged tapered plug design
- Lift jack prevents galling of the plug
- Quick open cover, no tools needed
- Large capacity baskets
- Threaded drain
- Machined basket seat
- Perforated or mesh stainless steel basket

OPTIONS

- Ductile iron construction
- Basket perforations from 1/32" to 1/2"
- Basket mesh from 20 to 400
- Monel baskets
- Vent valves
- Drain valves
- 1/4" NPT gauge taps
- Magnetic basket inserts
- Steam jacket
- Pressure differential gauge & switch connections
- Viton, PTFE encapsulated or EPDM seals

The Eaton Model 50 Plug Type Duplex Strainer is a simple, economical, and trouble free design–time tested in applications around the world over many years. This type of strainer is actually a high quality, pressure rated plug valve with integral straining baskets.

Switching the flow from one basket to the other is accomplished by moving the operating handle through a 90 degree arc. The design is such that is impossible for this operation to stop the flow because of the unique port design in the diverter plug. The entire switching operation takes less than 30 seconds. No tools are needed. The plug is automatically positioned each time in exactly the right spot by integral stops.

Before operating the handle a manual, integral lifting jack, built into the strainer is used to lift the diverter plug off of its seat. After the switching operation, the lifting jack is used to reseat the plug. The lifting jack is specially designed to lift and seat the plug easily, even under high pressures. A built in stop limits the distance the diverter plug can be raised. This minimizes the possibility of material bypassing the plug while it is rotated. It also prevents debris from building up under the plug and making it difficult to reseat.

Other important features of the plug type Model 50 Duplex Basket Strainers include a quick opening, swing-away yoke design cover. No tools are required to remove the covers for quick and easy access to the strainer baskets, and they go back on just as fast as they came off.

Draining of the basket chambers is simplified with the standard NPT drain taps—and all sizes are provided with mounting legs for bolting the strainer to the floor for a rock solid installation.

The Eaton plug type Model 50 Duplex Basket Strainer is your best choice for most applications. Its rugged design and ease of operation have made it the duplex strainer of choice around the world in hundreds of different industries.

Selection Chart

Size	Body Material	Plug Material	End Connections	Seals
5", 6", 8"	Iron	Iron or Bronze	Flanged 125#	Buna N
5", 6", 8"	Bronze	Bronze	Flanged 150#	Buna N
6", 8"	Carbon Steel	Bronze or Stainless Steel	Flanged 150#	Buna N
6", 8"	Stainless Steel	Stainless Steel	Flanged 150#	Viton®

Rating

Size	Rating
5"	200 psi@ 100°F.
6"	200 psi@ 100°F.
8"	150 psi @ 100°F.

C_V Factors*

Size	Value
5"	300
6"	420
8"	900

* For water with clean, perforated basket

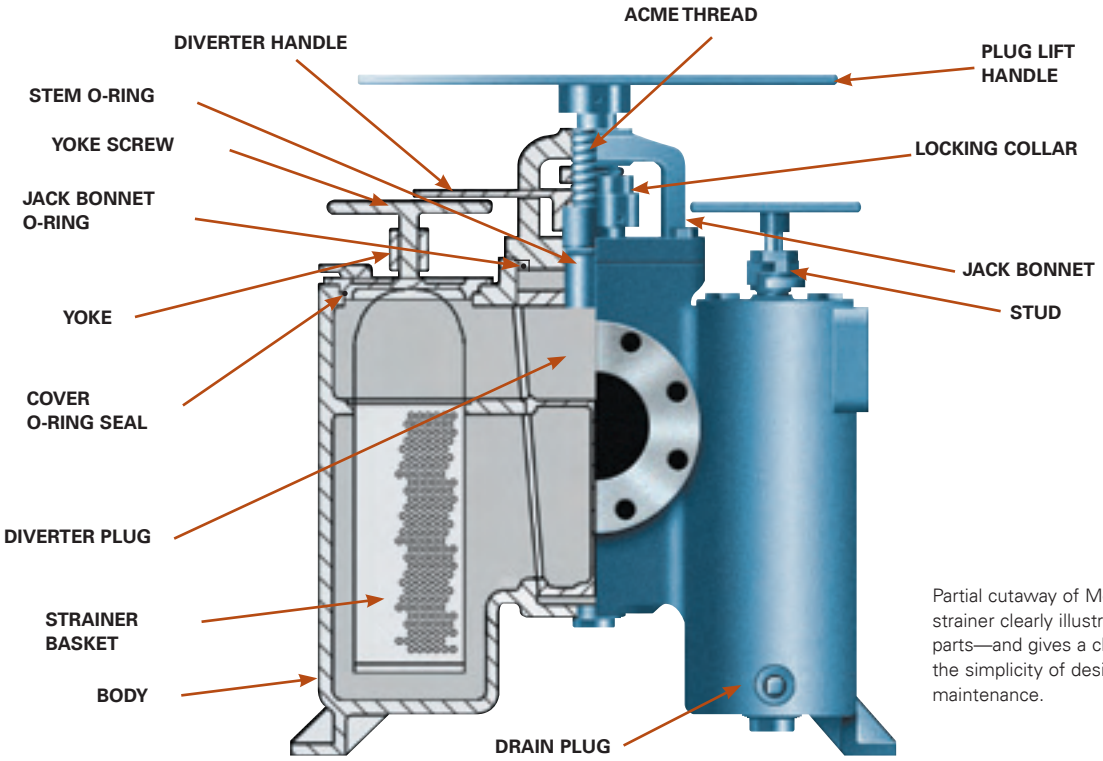

Partial cutaway of Model 50 duplex strainer clearly illustrates all major parts—and gives a clear indication of the simplicity of design and ease of maintenance.

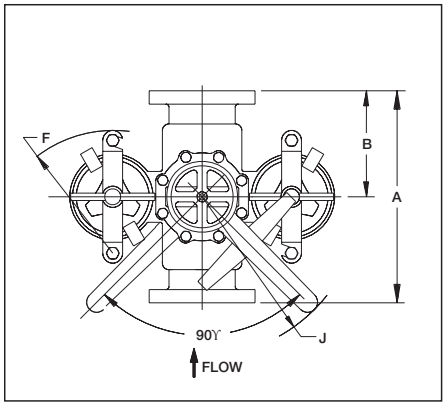

TOP VIEW

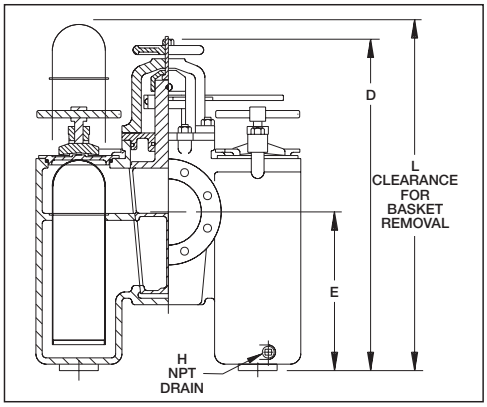

FRONT VIEW

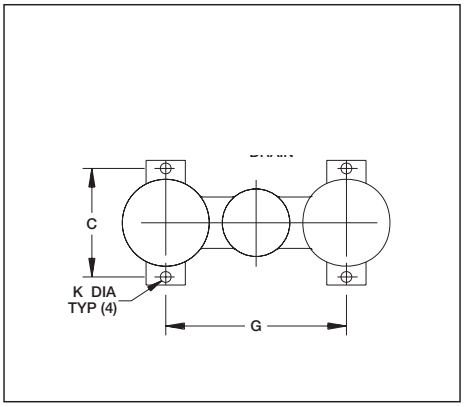

MOUNTING LAYOUT

Dimensions and weights are for reference only. Contact us for certified drawings.

Dimensions (in/mm)

Pipe Size	A	B	C	D	E	F	G	H	J	K	L	Weight(lb/kg) Cast Iron	Bronze	Carbon Steel	Stainless Steel
5"	18.38	9.00	9.75	33.25	14.75	10.25	17.19	3/8	19.75	0.56	41.00	403	412	–	–
	467	229	248	845	375	260	437	10	502	14	1041	183	187	–	–
6"	22.00	12.88	12.50	36.25	19.50	11.75	20.75	3/8	19.75	0.63	42.00	500	583	580	615
	559	327	318	921	495	298	527	10	502	16	1067	227	264	263	279
8"	25.00	14.00	17.00	50.63	23.06	—	30.75	1/2	28.00	0.94	56.00	1500	1800	1610	1670
	635	356	432	1286	586	—	781	15	711	24	56	682	818	732	759

Model 53BTX & 50 Pressure Drop Curves

Pressure Drop vs Flow Rate

These curves are for clean baskets, without mesh liners—and with water flowing through the strainer.

For mesh-lined baskets and/or for other fluids, you must first compute a correction factor. See Page 29 for full details.

Model 53BTX Duplex – 3/4" Through 4"

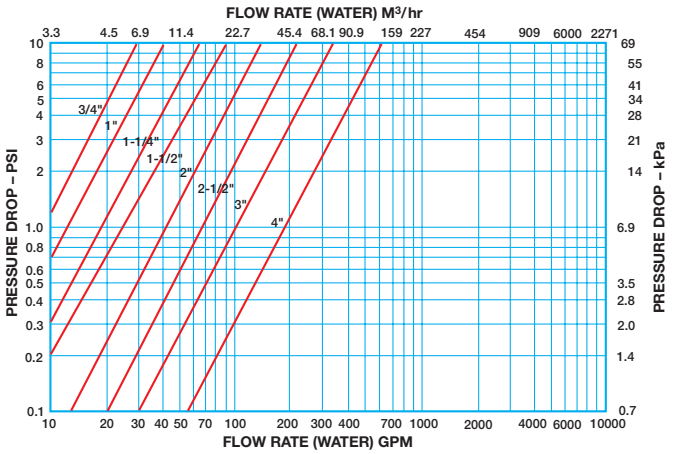

Model 50 Duplex – 5" Through 8"

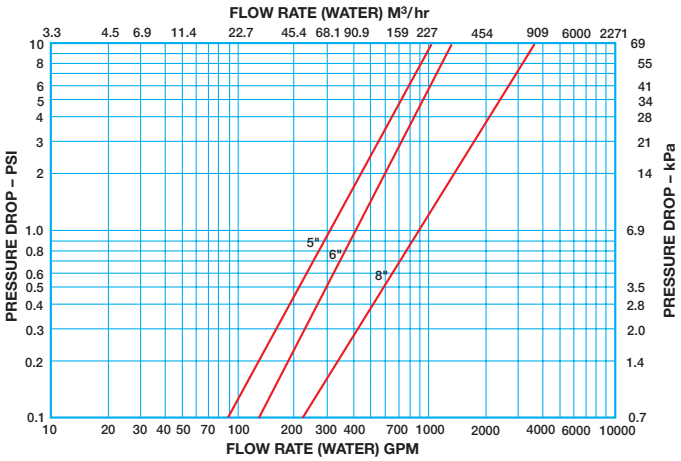

Model 50 Multi-Basket Duplex – 10" Through 18"

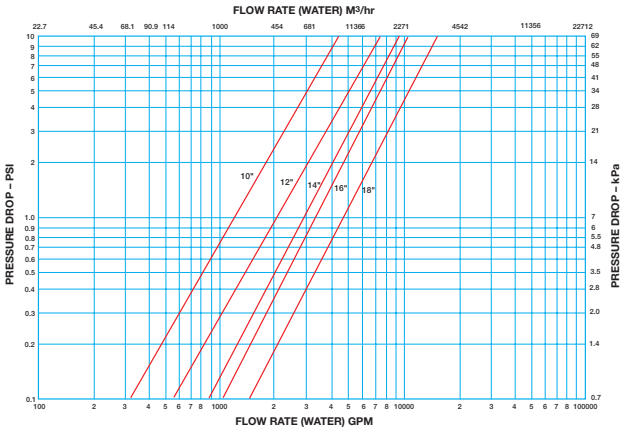

Strainer Sizing Chart

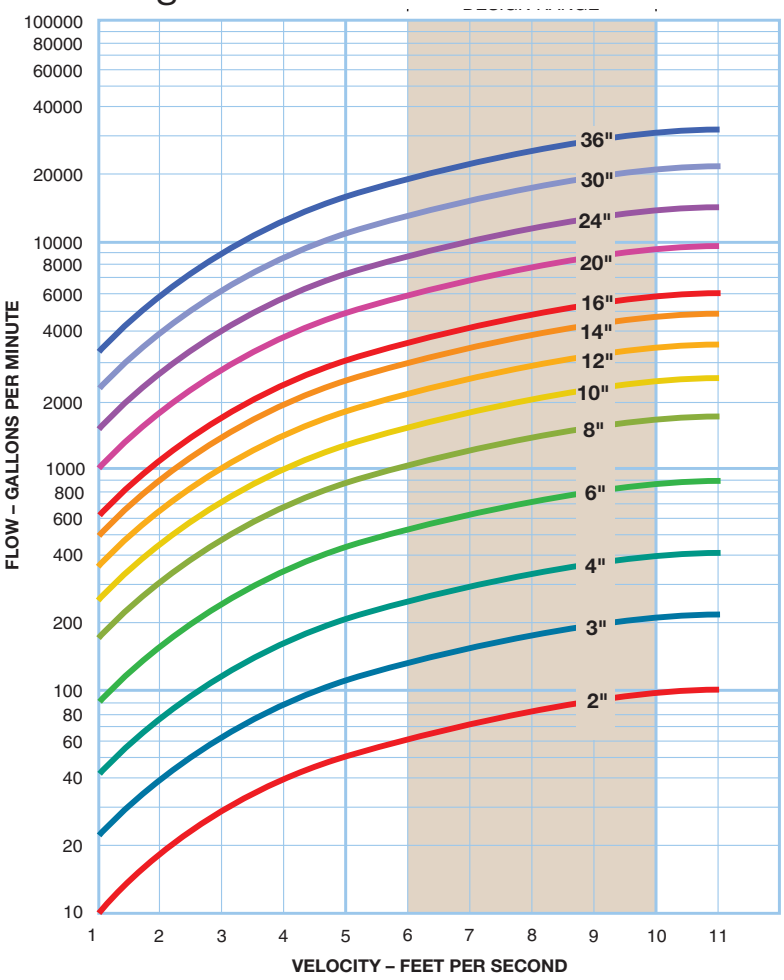

Strainer Basket Opening Equivalents

Mesh	Inches	Millimeters	Microns
400	0.0015	0.0381	38
300	0.0018	0.0457	45
250	0.0024	0.0609	60
200	0.0027	0.0686	68
150	0.0041	0.1041	104
100	0.0065	0.1651	165
80	0.007	0.1778	177
60	0.009	0.2286	228
40	0.015	0.8636	380
20	0.034	0.8636	862

Perf	Inches	Millimeters	Microns
1/32	0.033	0.838	838
3/64	0.045	1.143	1143
1/16	0.070	1.778	1776
3/32	0.094	2.387	2387
1/8	0.125	3.175	3175
5/32	0.150	3.810	3810
3/16	0.1875	4.762	4762
1/4	0.250	6.350	6350
3/8	0.375	9.525	9525
1/2	0.500	12.700	12700

Metal Alloys used in Eaton Strainers

Carbon Steel – ASTM A-216 Grade WCB

Tensile Strength: . . . . . 70,000 lb/sq in
Yield:. . . . . 36,000 lb/sq in
Elongation: 22%
Chemical Composition:
- C (Carbon) 0.30%
- Si (Silicon) 0.60%
- P (Phosphorus) 0.04%
- S (Sulfur) 0.045%
- Mn (Manganese). 1.00%
- Residual Elements . . . . . 1.00% max

Aluminum Bronze – ASTM B-148 Grade C95400

Tensile Strength: . . . . . 75,000 lb/sq in
Yield:. . . . . 30,000 lb/sq in
Elongation: 12%
Chemical Composition:
- Cu (Copper) 85%
- Fe (Iron). 4%
- Al (Aluminum) 11%

Stainless Steel – ASTM A-351 Grade CF8M

Tensile Strength: . . . . . 70,000 lb/sq in
Yield:. . . . . 30,000 lb/sq in
Elongation: 30%
Chemical Composition
- C (Carbon) . . . . . 0.08% max
- Si (Silicon) 1.5%
- P (Phosphorus) 0.040%
- Cr (Chromium). 18.0-21.0%
- Ni (Nickel) 9.0-12.0%
- Mn (Manganese). 1.50%
- S (Sulfur) 0.04%
- Mo (Molybdenum). 2.0-3.0%

Cast Iron – ASTM A-126 Class B

Tensile Strength: . . . . . 31,000 lb/sq in
Compressive Strength: . . . . . 109,000 lbs/sq in
Tensile Modulus: . . . . . 15 x 10 6 lb/sq in
Chemical Composition:
- C (Carbon) . . . . . 3.20-3.40 %
- Si (Silicon) 2.10-2.30%
- P (Phosphorus) 0.15-0.30%
- S (Sulfur) 0.08-0.12%
- Mn (Manganese). 0.50-0.80%

Ductile Iron - ASTM A-395 Grade 60 -40 -18

Tensile Strength: . . . . . 60,000 lb/sq in
Yield:. . . . . 40,000 lb/sq in
Elongation: 18%
Chemical Composition:
- C (Carbon) 3.20-4.0%
- Si (Silicon) 1.80-2.80%
- P (Phosphorus) . . . . . 0.08% max.
- S (Sulfur) . . . . . 0.03% max.
- Mn (Manganese). . . . . 0.03% max.

Bronze - ASTM B-62

Tensile Strength: . . . . . 30,000 lb/sq in
Yield:. . . . . 14,000 lbs/sq in
Elongation: 20%
Chemical Composition:
- Cu (Copper) 85.0%
- Sn (Tin) 5.0%
- Pb (Lead) 5.0%
- Zn (Zinc). 5.0%
- Ni (Nickel). . . . . 1.0% max.
- Fe (Iron) . . . . . 0.3% max.
- P (Phosphorus). . . . . 0.05% max.